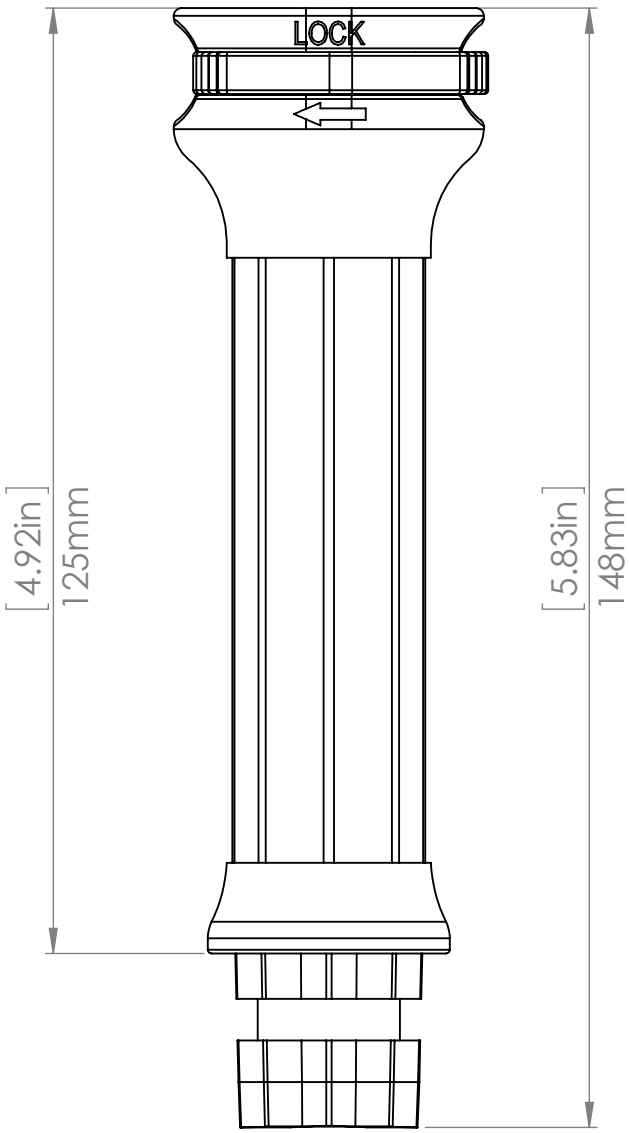
LOCK
[4.92in]
125mm
[5.83in]
148mm

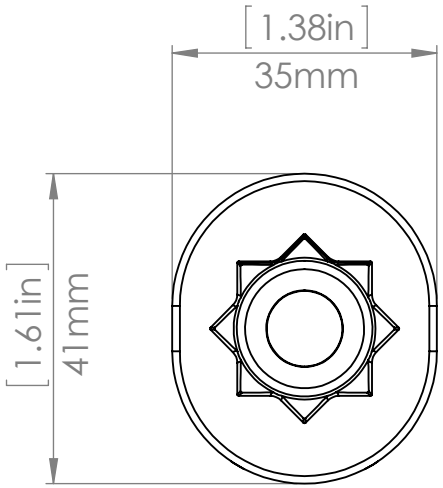
[1.38in]
35mm
[1.61in]
41mm