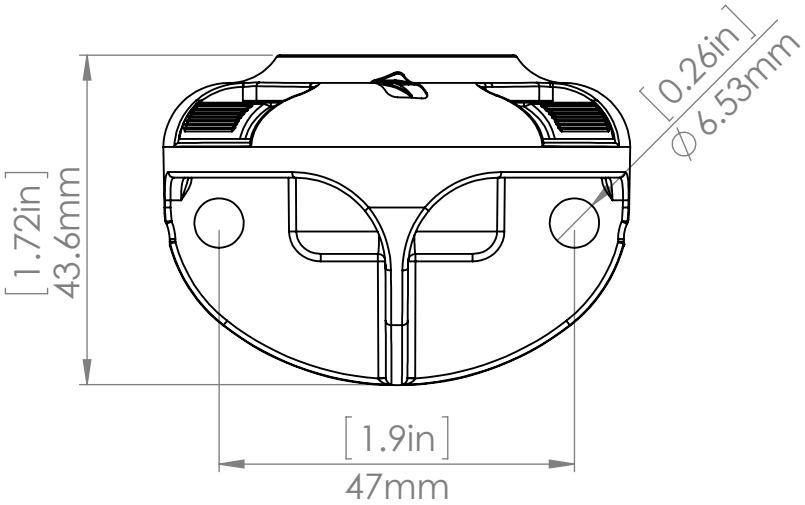
[0.26in]
∅ 6.53mm
[1.72in]
43.6mm
[1.9in]
47mm

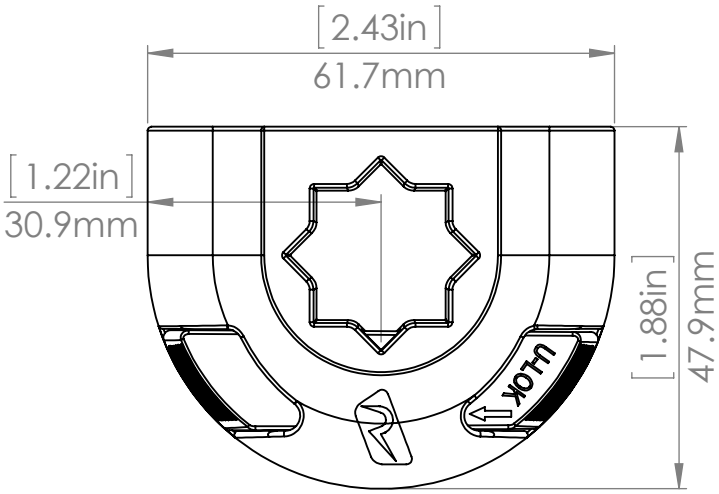
[2.43in]
61.7mm
[1.22in]
30.9mm
[1.88in]
47.9mm
ULOK